Ball Valves

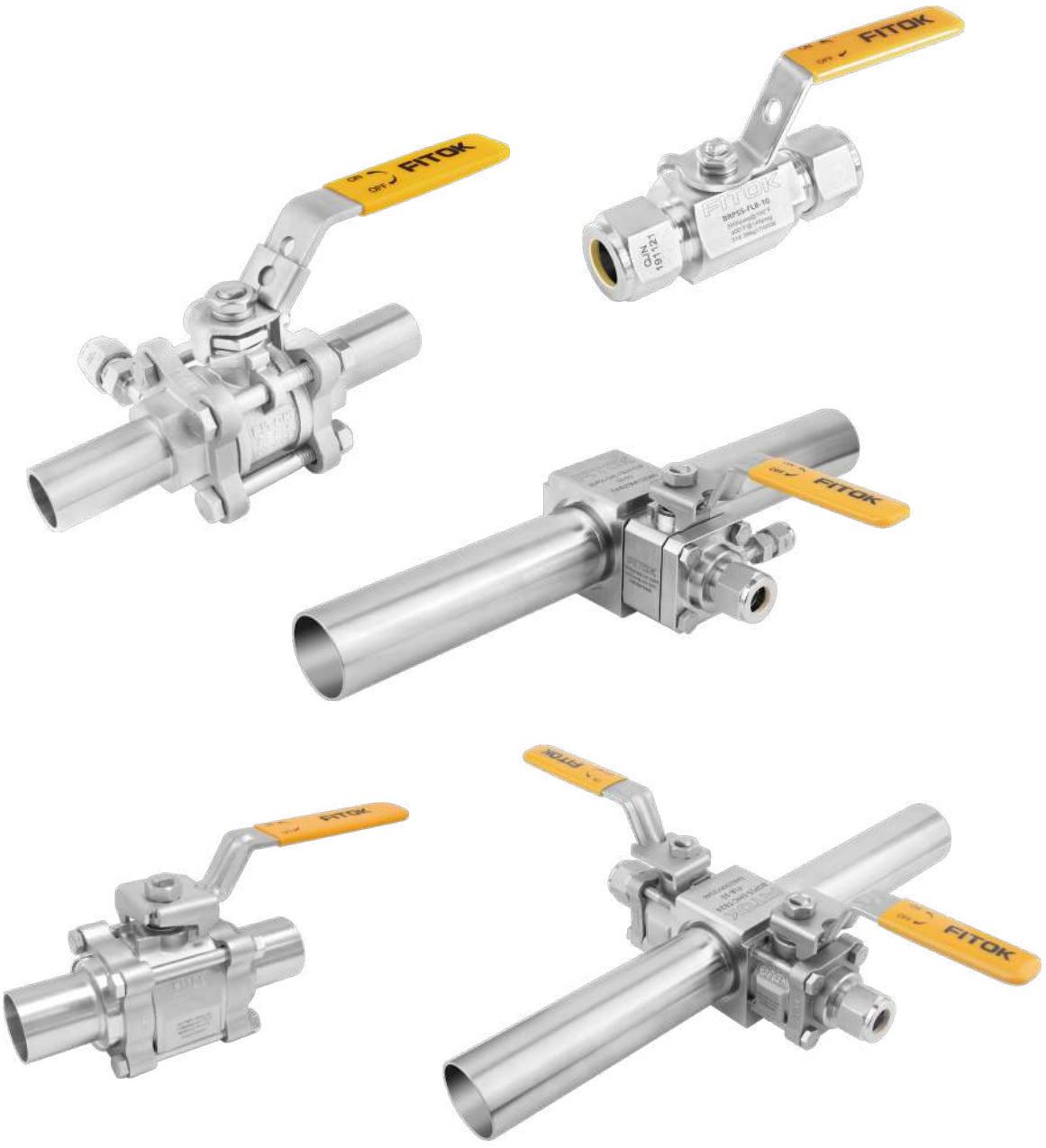

Contents

3-Piece High Purity Ball Valves
BGP Series 161

3-Piece High Purity Ball Valves
BHP Series 166

Distribution Block Valves
BDP Series 171

Hex Bar Stock High Purity Ball Valves
BRP Series 178

FITOK

3-Piece High Purity Ball Valves
BGP Series



Introduction

BGP series 3-piece high purity ball valves are designed to meet the requirements of degreasing, low working pressure, high flow rate and bi-directional flow for the clean dry air (CDA) and bulk gas distribution line, which are widely used in specialty gas, semiconductor and chemical industries.

Features

- Working pressure up to: 1000 psig (69.0 bar)
- Working temperature: -20 °F to 450 °F (-28 °C to 232 °C)
- Orifice sizes: 0.18" (4.6 mm) to 1.5" (38.1 mm)
- Factory tested for leaks with nitrogen or compressed air at rated working pressure, with optional helium leak testing to helium leak rate ≤1×10^{-8} std·cm^3/s

Pressure vs. Temperature

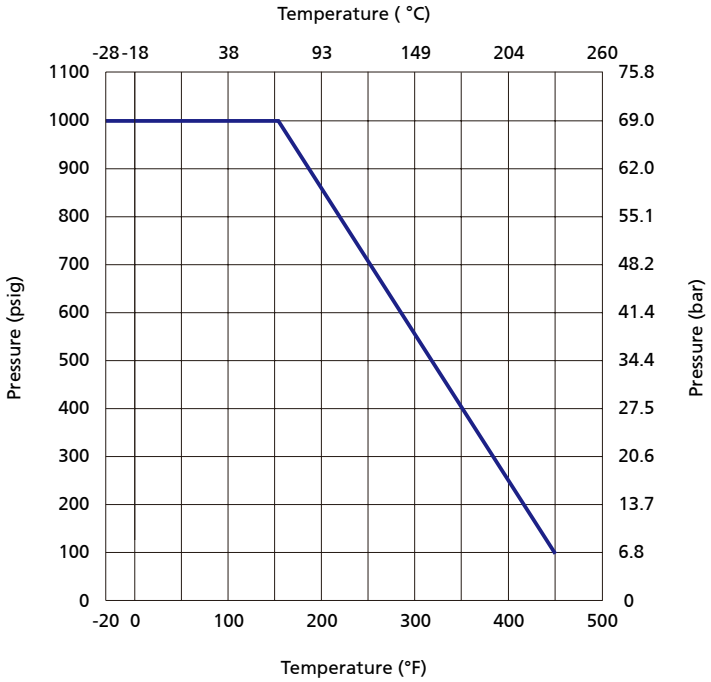

Note: The temperature and pressure rating is based on valves of standard materials.

Process Specification

Item \ Process Specification	Special Cleaning and Packaging Process (FC-02)	Ultra High Purity Process (FC-03)
Material	CF8M, CF3M	CF3M
Flow Path Surface Roughness	Ra 25 µin. (0.6 µm)	Ra 10 µin. (0.25 µm)
Process	Machined	Electropolished
Lubrication	Components in contact with the medium are treated with special lubricants that are oxygen- compatible	

Major Materials of Construction

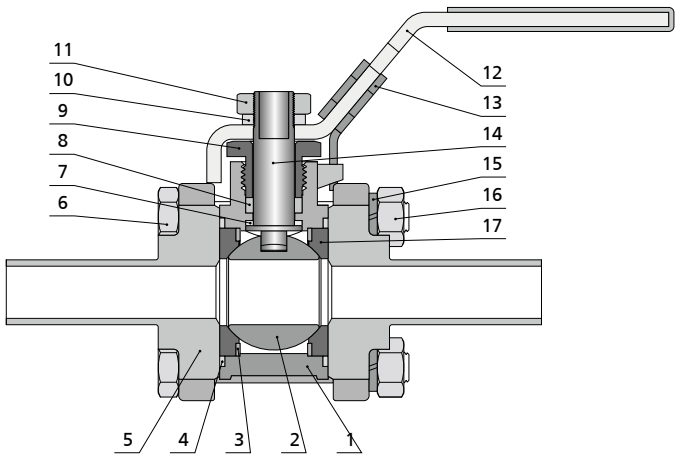

Item	Component	Material/Specification	
1	*Body*	*CF8M/A351*	*CF3M/A351*
2	*Ball*	*316 SS/A479*	*316L SS/A479*
3	*Support Ring*	*316 SS/A240*	*316L SS/A240*
4	*Side Seal*	*PTFE/D1710*	
5	*End Cap*	*CF3M/A351*	
6	Body Bolt	Stainless Steel	
7	*Stem Bearing*	*PTFE/D1710*	
8	*Stem Packing*	*PTFE/D1710*	
9	*Packing Gland*	*304 SS/A479*	
10	Gasket	Stainless Steel	
11	Stem Nut	Stainless Steel	
12	Handle	304 SS/A240 (with PVC Sleeve)	
13	Lock Block	304 SS/A240	
14	*Stem*	*316 SS/A479*	*316L SS/A479*
15	Standard Spring Gasket	Stainless Steel	
16	Hex Nut	Stainless Steel	
17	*Seat*	*PTFE/D1710*	

Note: Components in contact with the media are listed in italics. For other materials, please contact FITOK Group or our authorized distributors.

FITOK

Dimensions and Ordering Information

Dimensions, in inches (millimeters), are for reference only.

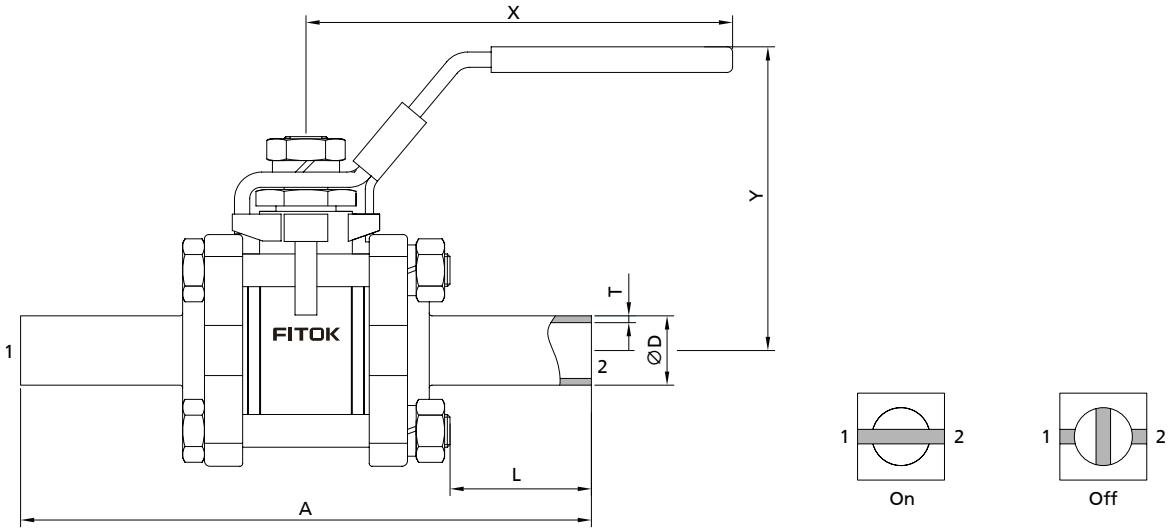

Ordering Information	Connection Type and Size	Orifice in. (mm)	Cv	Dimensions, in. (mm)					
				A	L	D	T	X	Y
BGP□□-TB4-05	1/4"× 0.035" Fractional Extended Tube Plain Butt Weld	0.18 (4.6)	1.1	2.97 (75.5)	0.81 (20.5)	0.25 (6.35)	0.035 (0.89)	2.69 (68.3)	1.46 (37.0)
BGP□□-FL4-05	1/4" FITOK Tube Fittings	0.19 (4.8)	1.2	2.63 (66.8)	-	-	-		
BGP□□-ML6-05	6 mm FITOK Tube Fittings								
BGP□□-ML8-05	8 mm FITOK Tube Fittings								
BGP□□-TB6-07	3/8"× 0.035" Fractional Extended Tube Plain Butt Weld	0.28 (7.1)	3.8	3.30 (83.3)	0.81 (20.5)	0.375 (9.53)	0.035 (0.89)		
BGP-□□-FL6-07	3/8" FITOK Tube Fittings			2.63 (66.8)	-	-	-		
BGP□□-ML10-07	10 mm FITOK Tube Fittings								
BGP□□-TB8-11	1/2"× 0.049" Fractional Extended Tube Plain Butt Weld	0.40 (10.21)	7.2	4.12 (104.6)	1.00 (25.4)	0.50 (12.7)	0.049 (1.24)	3.94 (100.0)	2.19 (55.7)
BGP□□-FL8-11	1/2" FITOK Tube Fittings	0.42 (10.6)	7.5	4.04 (103.0)	-	-	-		
BGP□□-ML12-11	12 mm FITOK Tube Fittings								
BGP□□-ML14-11	14 mm FITOK Tube Fittings								
BGP□□-FL10-13	5/8" FITOK Tube Fittings	0.5 (12.7)	11.3						
BGP□□-TB12-15	3/4"× 0.065" Fractional Extended Tube Plain Butt Weld	0.55 (14.0)	13	5.12 (130.0)	1.38 (35)	0.75 (19.05)	0.065 (1.65)	3.94 (100.0)	2.26 (57.5)
BGP□□-FL12-15	3/4" FITOK Tube Fittings			4.04 (103.0)	-	-	-		
BGP□□-ML18-15	18 mm FITOK Tube Fittings								
BGP□□-TB16-20	1"× 0.065" Fractional Extended Tube Plain Butt Weld	0.79 (20.0)	34	6.3 (160.0)	1.67 (42.5)	1.00 (25.4)	0.065 (1.65)	5.18 (131.5)	2.66 (67.5)
BGP□□-FL16-20	1" FITOK Tube Fittings			5.21 (132.3)	-	-	-		
BGP□□-ML22-20	22 mm FITOK Tube Fittings								
BGP□□-ML25-20	25 mm FITOK Tube Fittings								
BGP□□-TB24-32	1 1/2"× 0.065" Fractional Extended Tube Plain Butt Weld	1.25 (31.8)	100	7.81 (198.3)	2.07 (52.6)	1.50 (38.1)	0.065 (1.65)	9.14 (232)	4.03 (102)
BGP□□-TB32-38	2"× 0.065" Fractional Extended Tube Plain Butt Weld	1.50 (38.1)	130	8.59 (218.1)	2.04 (51.8)	2.00 (50.8)			4.16 (103)

1. Sizes and types listed are standard. Other sizes and types are available upon request, please contact FITOK Group or our authorized distributors.
2. Connection tube length can be specified, such as BGPSS-TB4-05, if L=30 mm is required, the part number should be changed to BGPSS-TB4 × L30-05.

FITOK

Locking Device

- Lock BGP series valves, locking hole diameters of: valves with orifice 05 or 07 are 0.185 in. (4.7 mm); valves with orifice 11, 13, 15, or 20 are 0.22 in. (5.7 mm); valves with orifice 32, 38 are 0.394 in. (10 mm)
- To order a ball valve with locking device, please refer to the "Ordering Number Description" and add -L to the valve ordering number Example: BGPSS-FL8-11-L

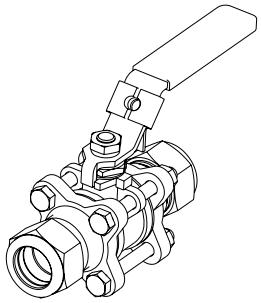

Diagram of Ball Valves with Locking Device

Low Dead Space Inserts

- Reduce fluid entrapment around the ball, stem, and seat when the valve is open or closed
- To order a ball valve with low dead space insert, please add -RZ to the valve ordering number, Example: BGPSS-FL4-05-RZ



Ordering Number Description

BGPSS - TB4 - TB6 - 05 - I L - U1D2 - RZ - AR2F3

Series	
BGP	

Body Material	
SS	CF8M
6L	CF3M

Connection 1 Type	
TB	Fractional Extended Tube Plain Butt Weld
FL	Fractional Tube Fitting
ML	Metric Tube Fitting
FR	Integral Male FR Fitting
FO	FO Series O-Ring Face Seal Fitting

Connection 1 Size	
4	1/4" or 1/4"× 0.035"
6	3/8" or 3/8"× 0.035" or 6 mm
8	1/2" or 1/2"× 0.049" or 8 mm
10	5/8" or 10 mm
12	3/4" or 3/4"× 0.065" or 12 mm
14	14 mm
16	1" or 1"× 0.065"
18	18 mm
22	22 mm
24	1 1/2"× 0.065"
25	25 mm
32	2"× 0.065"

Port 2 Type	Port 2 Size
Same as Port 1	
Specified in the same way as the Port 1	

Orifice Size	
05	Maximum 0.19" (4.8 mm)
07	0.28" (7.1 mm)
11	0.42" (10.6 mm)
13	0.50" (12.7 mm)
15	0.55" (14.0 mm)
20	0.79" (20.0 mm)
32	1.25" (31.8 mm)
38	1.50" (38.1 mm)

Handle	
	Yellow Handle Cover
I	Red Handle Cover
F	Green Handle Cover
J	Blue Handle Cover

Locking Device	
	None
L	Yes

Upstream Purge	
	None
U1	1/4" Tube Fitting with Plug
U2	1/4" Male FR Fitting with Plug

Downstream Purge	
	None
D1	1/4" Tube Fitting with Plug
D2	1/4" Male FR Fitting with Plug

Special Application	
	None
RZ	Low Dead Space Insert

Supplementary Testing	
	None
AR2	Helium Leak Testing

Process Specification	
	FC-02
F3	FC-03 (For CF3M only)

Note: "Ordering Number Description" is a reference to understand the combination rules of FITOK product part number.
Not all combinations are available. Should you have any questions, please contact FITOK Group or our authorized distributors.

3-Piece High Purity Ball Valves
BHP Series



Introduction

BHP series 3-piece high purity ball valves are designed to meet the requirements of degreasing, high working pressure, high flow rate and bi-directional flow for the clean dry air (CDA) and bulk gas distribution line, which are widely used in specialty gas, semiconductor and chemical industries.

Features

- Working pressure up to: 3000 psig (207 bar)
- Working temperature: -20 °F to 450 °F (-28 °C to 232 °C)
- Orifice sizes: 0.18" (4.6 mm) to 1.5" (38.1 mm)
- Factory tested for leaks with nitrogen or compressed air at rated working pressure, with optional helium leak testing to helium leak rate ≤1×10^{-8} std·cm^3/s

Pressure vs. Temperature

05/07/10/13/22 Orifice

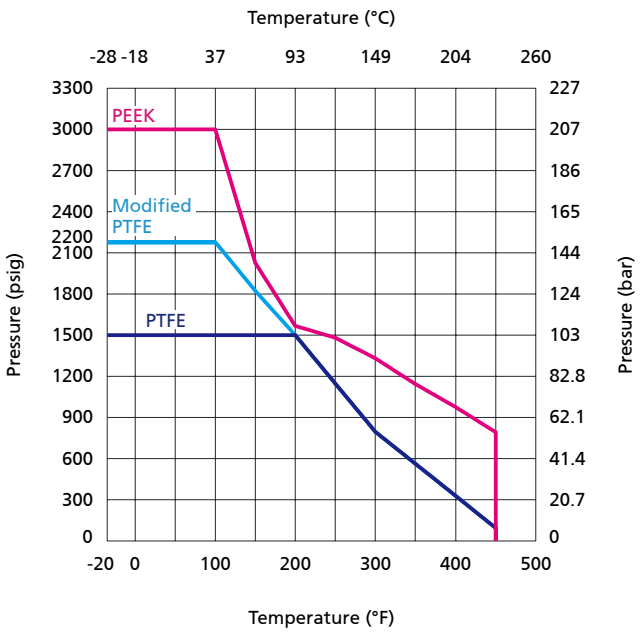

32/38 Orifice

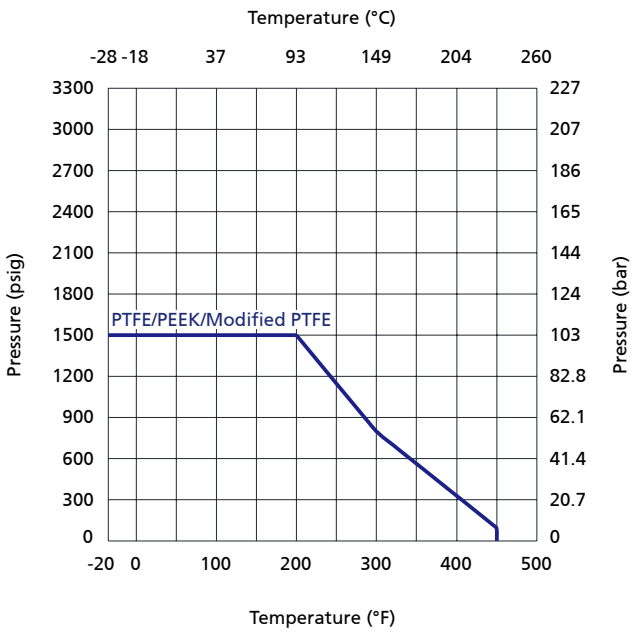

Notes:
1. The temperature and pressure rating is based on valves of standard materials.
2. Modified PTFE is a modified second generation polytetrafluoroethylene (TFM 1600), which is a PFA and PTFE composite. It has comparable chemical compatibility with PTFE, lower deformation rate than PTFE, and higher pressure and temperature tolerance than PTFE.

FITOK

Working Pressure of the Weld End at -28 °C to 38 °C

Body Material	End Code	Size	Working Pressure (psig)
CF8M/CF3M	TB4	1/4"× 0.035"	5100
	TB6	3/8"× 0.035"	3300
	TB8	1/2"× 0.049"	3700
	TB12	3/4"× 0.065"	3300
	TB16	1"× 0.065"	2400
	TB24	1 1/2"× 0.065"	1600
	TB32	2"× 0.065"	1200

Note: BHP series high purity ball valves have a maximum working pressureof 3000 psig, which is also limited by the end connection.

Process Specification

Process Specification / Item	Special Cleaning and Packaging Process (FC-02)	Ultra High Purity Process (FC-03)
Material	CF8M, CF3M	CF3M
Flow Path Surface Roughness	Ra 25 μin. (0.6 μm)	Ra 10 μin. (0.25 μm)
Process	Machined	Electropolished
Lubrication	Components in contact with the medium are treated with special lubricants that are oxygen- compatible	

FITOK

Major Materials of Construction

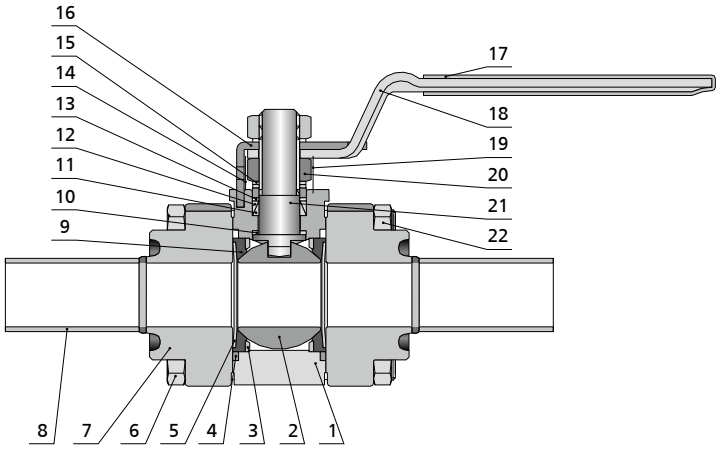

Item	Component	Material/Specification	
1	*Body*	*CF8M/A351*	*CF3M/A351*
2	*Ball*	*316 SS/A479*	*316L SS/A479*
3	*Support Ring*	*316 SS/A240*	*316L SS/A240*
4	*Side Seal*	*PTFE/D1710*	
5	*Butterfly Spring*	*Strain Hardened 316 SS/A240*	
6	Body Bolt	Gr.B8M/A193	
7	*End Cap*	*CF8M/A351*	*CF3M/A351*
8	*Welded Tube*	*316L SS/A269*	
9	*Valve Seat*	*PTFE/Modified PTFE/PEEK*	
10	*Stem Bearing*	*PEEK*	
11	*Lower Packing*	*PTFE/D1710*	
12	*Upper Packing*	*PTFE/D1710*	
13	Packing Support	PEEK	
14	Seal Gland	PTFE-coated 316 SS/A479	
15	Stem Spring	Strain Hardened 316 SS/A240	
16	Stop Plate	304 SS/240	
17	Handle Cover	Vinyl Plastic	
18	Handle	304 SS/A240	
19	Grounding Spring	302 SS/A313	
20	Stem Nut	Gr.8M/A194	
21	*Stem*	*316 SS/A479*	*316L SS/A479*
22	Body Nut	Gr.8M/A194	

Note: Wetted components are listed in italics. For other valve materials, please contact FITOK or an authorized distributor.

FITOK

Dimensions and Ordering Information

Dimensions, in inches (millimeters), are for reference only.

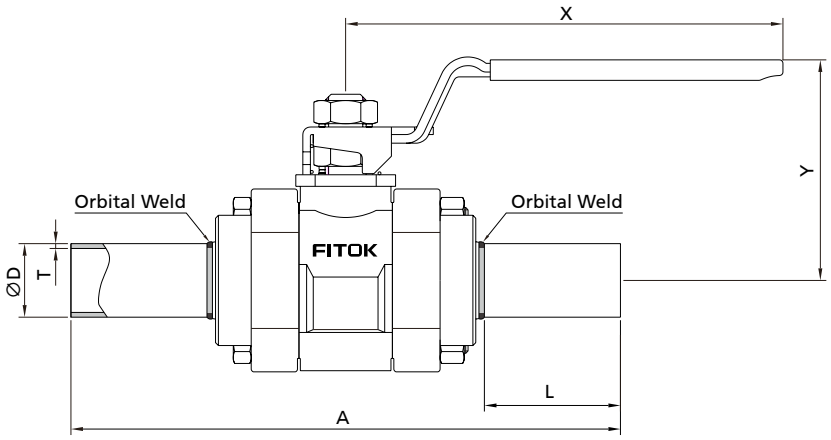

Ordering Information	Connection Type and Size	Orifice in. (mm)	Cv	Dimensions, in. (mm)					
				A	L	D	T	X	Y
BHP□□-TB4-05	1/4"× 0.035" Fractional Extended Tube Plain Butt Weld	0.18 (4.6)	1.1	3.54 (90)	0.79 (20)	0.25 (6.35)	0.035 (0.89)	2.37 (60.2)	1.66 (42.2)
BHP□□-FL4-05	1/4" FITOK Tube Fittings	0.19 (4.8)	1.2	3.17 (80.5)	-	-	-		
BHP□□-ML6-05	6 mm FITOK Tube Fittings								
BHP□□-ML8-05	8 mm FITOK Tube Fittings		2.5						
BHP□□-TB6-07	3/8"× 0.035" Fractional Extended Tube Plain Butt Weld	0.28 (7.1)	3.8	3.54 (90)	0.79 (20)	0.375 (9.53)	0.035 (0.89)	2.37 (60.2)	1.66 (42.2)
BHP□□-FL6-07	3/8" FITOK Tube Fittings			3.17 (80.5)	-	-	-		
BHP□□-ML10-07	10 mm FITOK Tube Fittings			3.20 (81.3)					
BHP□□-TB8-10	1/2"× 0.049" Fractional Extended Tube Plain Butt Weld	0.40 (10.2)	7.2	4.72 (120)	1.18 (30)	0.50 (12.7)	0.049 (1.24)	4.50 (114)	2.35 (59.7)
BHP□□-FL8-10	1/2" FITOK Tube Fittings	0.41 (10.4)	7.5	4.04 (103.0)	-	-	-		
BHP□□-ML12-10	12 mm FITOK Tube Fittings								
BHP□□-FL12-13	3/4" FITOK Tube Fittings	0.52 (13.1)	13.6	4.04 (103.0)	-	-	-	4.50 (114)	2.35 (59.7)
BHP□□-ML16-13	16 mm FITOK Tube Fittings								
BHP□□-ML18-13	18 mm FITOK Tube Fittings								
BHP□□-TB12-22	3/4"× 0.065" Fractional Extended Tube Plain Butt Weld	0.62 (15.7)	18	5.12 (170)	1.42 (40)	0.75 (19.05)	0.065 (1.65)	6.00 (152)	2.94 (74.7)
BHP□□-TB16-22	1"× 0.065" Fractional Extended Tube Plain Butt Weld	0.87 (22.1)	36	6.3 (190)	1.97 (50)	1.00 (25.4)			
BHP□□-FL16-22	1" FITOK Tube Fittings	0.88 (22.2)	40	5.36 (136)	-	-	-		
BHP□□-FL20-22	1 1/4" FITOK Tube Fittings			6.34 (161)					
BHP□□-ML25-22	25 mm FITOK Tube Fittings			5.36 (136)					
BHP□□-ML28-22	28 mm FITOK Tube Fittings			6.14 (156)					
BHP□□-TB24-32	1 1/2"× 0.065" Fractional Extended Tube Plain Butt Weld	1.25 (31.8)	100	8.59 (218.2)	2.07 (52.6)	1.50 (38.1)	0.065 (1.65)	9.14 (232)	4.03 (102)
BHP□□-TB32-38	2"× 0.065" Fractional Extended Tube Plain Butt Weld	1.50 (38.1)	130	9.03 (229.3)	2.04 (51.8)	2.00 (50.8)			4.16 (103)

1. Sizes and types listed are standard. Other sizes and types are available upon request, please contact FITOK Group or our authorized distributors.
2. Connection tube length can be specified, such as BHPSS-TB4-05, if L=30 mm is required, the part number should be changed to BHPSS-TB4 × L30-05.

Locking Device

- Lock BHP series valves, locking hole diameters of the whole series of valves are 0.20 in. (5 mm)
- To order a ball valve with locking device, please refer to the "Ordering Number Description" and add -L to the valve ordering number Example: BHPSS-FL16-22-L

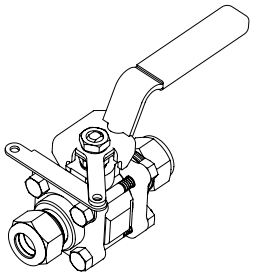

Diagram of Ball Valves with Locking Device

Low Dead Space Inserts

- Reduce fluid entrapment around the ball, stem, and seat when the valve is open or closed
- To order a ball valve with low dead space insert, please add -RZ to the valve ordering number, Example: BHPSS-FL4-05-RZ



Ordering Number Description

BHPSS - FL8 - ML12 - P13 -CHQL - U1D1 - RZ - AR2F3

Series	
BHP	

Body Material	
SS	CF8M
6L	CF3M

Connection 1 Type	
TB	Fractional Extended Tube Plain Butt Weld
FL	Fractional Tube Fitting
ML	Metric Tube Fitting
FR	Integral Male FR Fitting
FO	FO Series O-Ring Face Seal Fitting

Connection 1 Size	
4	1/4" or 1/4"× 0.035"
6	3/8" or 3/8"× 0.035" or 6 mm
8	1/2" or 1/2"× 0.049" or 8 mm
10	10 mm
12	3/4" or 3/4"× 0.065" or 12 mm
16	1" or 1"× 0.065" or 16 mm
18	18 mm
20	1 1/4"
24	1 1/2"× 0.065"
25	25 mm
28	28 mm
32	2"× 0.065"

Connection 2 Type	Connection 2 Size
	Same as Connection 1
Specified in the same way as the Connection 1	

Seat Material	
	PTFE
P	PEEK
M	Modified PTFE

Orifice Size	
05	Maximum 0.19" (4.8 mm)
07	0.28" (7.1 mm)
10	0.41" (10.4 mm)
13	0.52" (13.1 mm)
22	0.88"(22.2 mm)
32	1.25"(31.8 mm)
38	1.5"(38.1 mm)

Handle/Actuator	
	Yellow Handle Cover
I	Red Handle Cover
F	Green Handle Cover
J	Blue Handle Cover
C	90° Normally Closed Pneumatic Actuator
O	90° Normally Open Pneumatic Actuator
D	90° Double Acting Pneumatic Actuator
E	90° Electric Actuator

Actuator Accessory	
	None
H	Mechanical limit switch
N	Inductive limit switch
Q	Solenoid Valve
HQ	Mechanical limit switch and solenoid valve
NQ	Inductive limit switch and solenoid valve

Locking Device	
	None
L	Yes

Upstream Purge	
	None
U1	1/4" Tube Fitting with Plug
U2	1/4" Male FR Fitting with Plug

Downstream Purge	
	None
D1	1/4" Tube Fitting with Plug
D2	1/4" Male FR Fitting with Plug

Special Application	
	None
RZ	Low Dead Space Insert

Supplementary Testing	
	None
AR2	Helium Leak Testing

Process Specification	
	FC-02
F3	FC-03 (For CF3M only)

Note: "Ordering Number Description" is a reference to understand the combination rules of FITOK product part number. Not all combinations are available. Should you have any questions, please contact FITOK Group or our authorized distributors.

Distribution Block Valves
BDP Series



Features

- Working temperature: -20 °F to 450 °F (-28 °C to 232 °C)
- Main line tube is full bore
- Main line Tube with orbital welding
- Branch ball valves are BHP or BGP series
- Factory tested for leaks with nitrogen or compressed air at rated working pressure, with optional helium leak testing to helium leak rate ≤1×10^{-8} std·cm^3/s

Pressure vs. Temperature

Branch ball valves are BHP Series

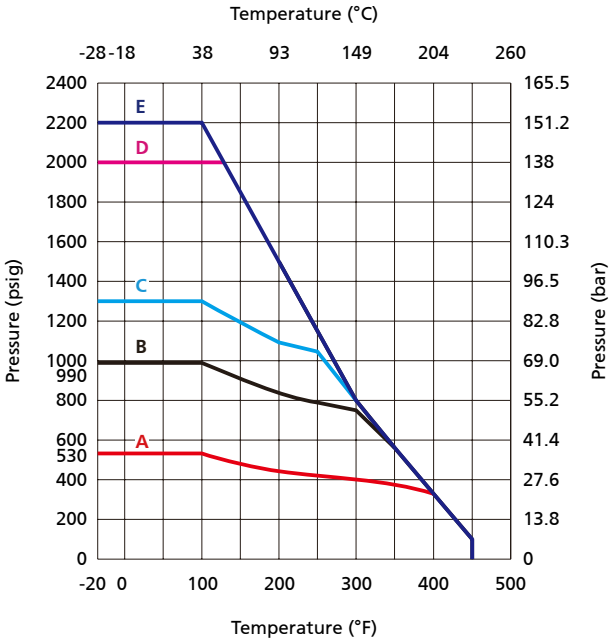

Branch ball valves are BGP Series

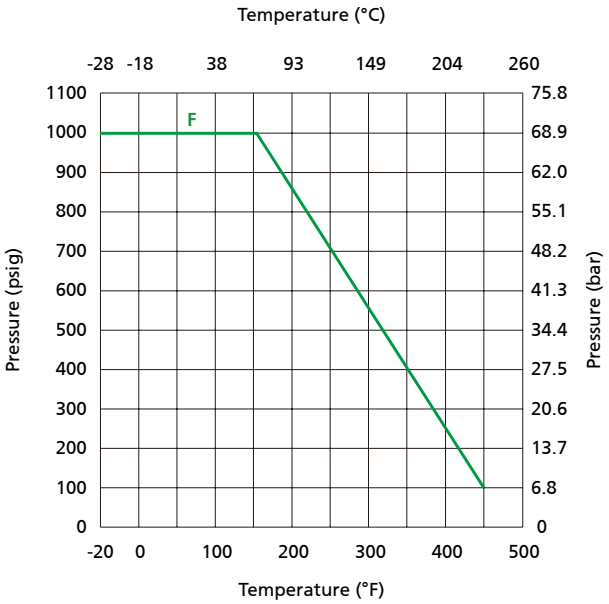

Main Line Tube Size in (mm)	4 × 0.083	2 × 0.065	1 1/2 × 0.065	1 × 0.065	3/4 × 0.065 1/2 × 0.049
Orifice Code	38, 32	13, 10	13, 10, 07	13, 10, 07	05, 07
Temperature and Pressure Curve	A	B	C	D	E

Main Line Tube Size in (mm)	1 1/2 × 0.065	1 × 0.065	3/4 × 0.065 1/2 × 0.065
Orifice Code	15, 11, 07	15, 11, 07	07, 05
Temperature and Pressure Curve	F		

Process Specification

Item \ Process Specification	Special Cleaning and Packaging Process (FC-02)	Ultra High Purity Process (FC-03)
Material	CF8M, CF3M	CF3M
Flow Path Surface Roughness	Ra 25 µin. (0.6 µm)	Ra 10 µin. (0.25 µm)
Process	Machined	Electropolished
Lubrication	Components in contact with the medium are treated with special lubricants that are oxygen- compatible	

Major Materials of Construction

Single Horizontal Cross

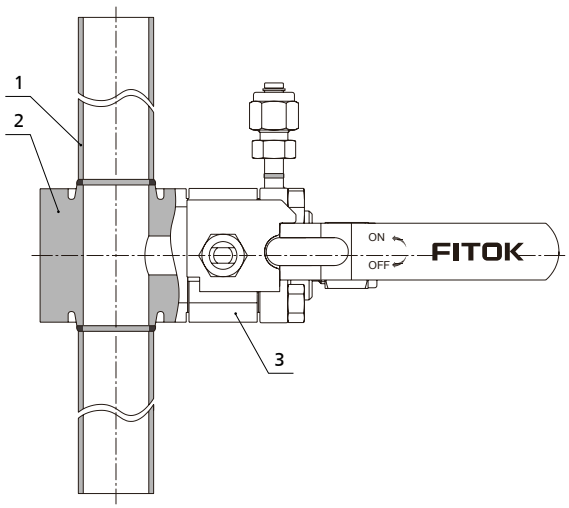

Item	Component		Material/Specification	
1	*Main Line Tube*		*316L SS/A269*	
2	*Valve block*		*316L SS/A479*	
3	*BHP Series Branch Ball Valve*	*Body*	*CF8M/A351*	*CF3M/A351*
		Seat	*Modified PTFE*	
	BGP Series Branch Ball Valve	*Body*	*CF8M/A351*	*CF3M/A351*
		Seat	*PTFE*	

Note:
Components in contact with the media are listed in italics. Branch ball valves are BHP and BGP series, and other parts not listed are the same materials as BHP and BGP series standard valve parts.

Double Horizontal Cross

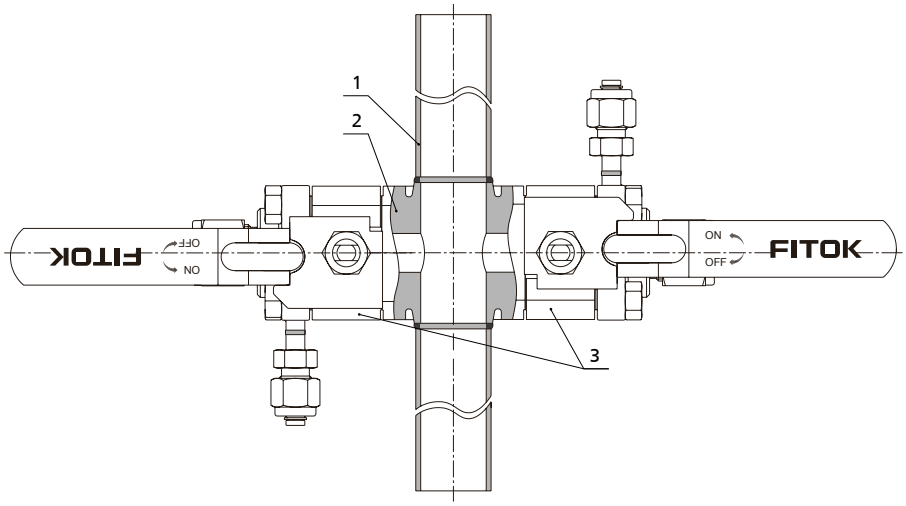

FITOK

Dimensions and Ordering Information

Please refer to BHP and BGP series for the dimensions of branch ball valves.
Dimensions are indicated in in. (mm), only for reference and subject to change.

Single Horizontal Cross

(Branch ball valves are BHP series)

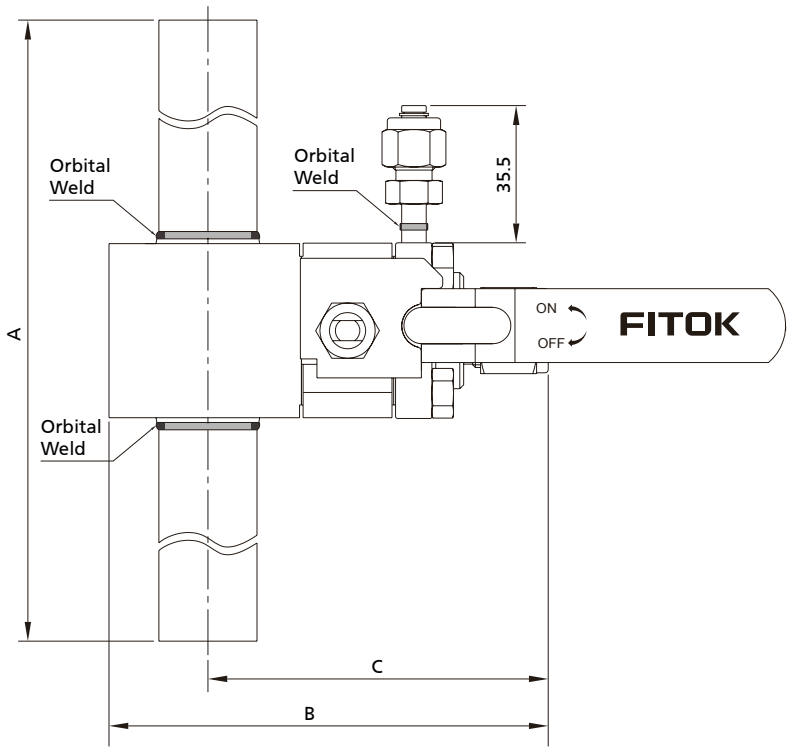

Ordering information	Main line tube size in.	Branch line tube end size in.	Orifice in. (mm)	Dimensions, in. (mm)		
				A	B	C
BDP□□-SHC-TB8-FL4-05-D1	1/2 × 0.049	1/4	0.187 (4.8)	7.00 (178)	3.31 (84.1)	2.56 (65.0)
BDP□□-SHC-TB8-FL6-07-D1		3/8	0.281 (7.1)			
BDP□□-SHC-TB12-FL4-05-D1	3/4 × 0.065	1/4	0.187 (4.8)	9.00 (229)	3.31 (84.1)	2.56 (65.0)
BDP□□-SHC-TB12-FL6-07-D1		3/8	0.281 (7.1)			
BDP□□-SHC-TB16-FL6-07-D1	1 × 0.065	3/8	0.281 (7.1)	13.0 (330)	4.31 (109)	3.31 (84.1)
BDP□□-SHC-TB16-FL8-10-D1		1/2	0.411 (10.4)		4.44 (113)	3.44 (87.4)
BDP□□-SHC-TB16-FL12-13-D1		3/4	0.516 (13.1)			
BDP□□-SHC-TB24-FL6-07-D1	1 1/2 × 0.065	3/8	0.281 (7.1)	13.0 (330)	4.56 (116)	3.44 (87.4)
BDP□□-SHC-TB24-FL8-10-D1		1/2	0.411 (10.4)		4.69 (119)	6.56 (90.4)
BDP□□-SHC-TB24-FL12-13-D1		3/4	0.516 (13.1)			
BDP□□-SHC-TB32-FL8-10-D1	2 × 0.065	1/2	0.411 (10.4)	13.0 (330)	5.97 (152)	4.06 (103)
BDP□□-SHC-TB32-FL12-13-D1		3/4	0.516 (13.1)			
BDP□□-SHC-TB64-FL24-32-D1	4 × 0.083	1 1/2	1.250 (31.8)	23.0 (584)	10.2 (259)	7.19 (183)
BDP□□-SHC-TB64-FL32-38-D1		2	1.500 (38.1)		11.6 (295)	8.63 (219)

Single Horizontal Cross

(Branch ball valves are BGP series)

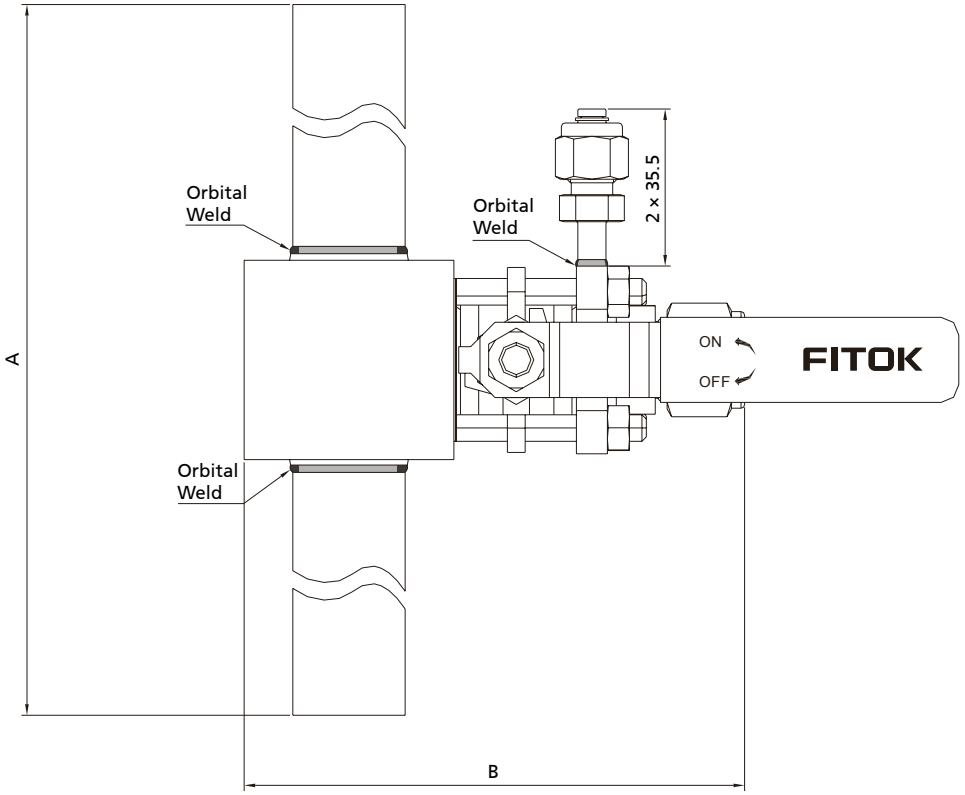

Ordering information	Main line tube size in.	Branch line tube end size in.	Orifice in. (mm)	Dimensions, in. (mm)	
				A	B
BDP□□-SHC-TB8-BGP-FL4-05-D1	1/2 × 0.049	1/4	0.19 (4.8)	7.00 (178)	3.12 (79.2)
BDP□□-SHC-TB8-BGP-FL6-07-D1		3/8	0.28 (7.1)		
BDP□□-SHC-TB12-BGP-FL4-05-D1	3/4 × 0.065	1/4	0.19 (4.8)	9.00 (229)	3.12 (79.2)
BDP□□-SHC-TB12-BGP-FL6-07-D1		3/8	0.28 (7.1)		
BDP□□-SHC-TB16-BGP-FL6-07-D1	1 × 0.065	3/8	0.28 (7.1)	13.0 (330)	4.53 (115)
BDP□□-SHC-TB16-BGP-FL8-11-D1		1/2	0.42 (10.6)		4.72 (120)
BDP□□-SHC-TB16-BGP-FL12-15-D1		3/4	0.55 (14.0)		
BDP□□-SHC-TB24-BGP-FL6-07-D1	1 1/2 × 0.065	3/8	0.28 (7.1)	13.0 (330)	4.80 (122)
BDP□□-SHC-TB24-BGP-FL8-11-D1		1/2	0.42 (10.6)		5.00 (127)
BDP□□-SHC-TB24-BGP-FL12-15-D1		3/4	0.55 (14.0)		

FITOK

Double Horizontal Cross
(Branch ball valves are BHP series)

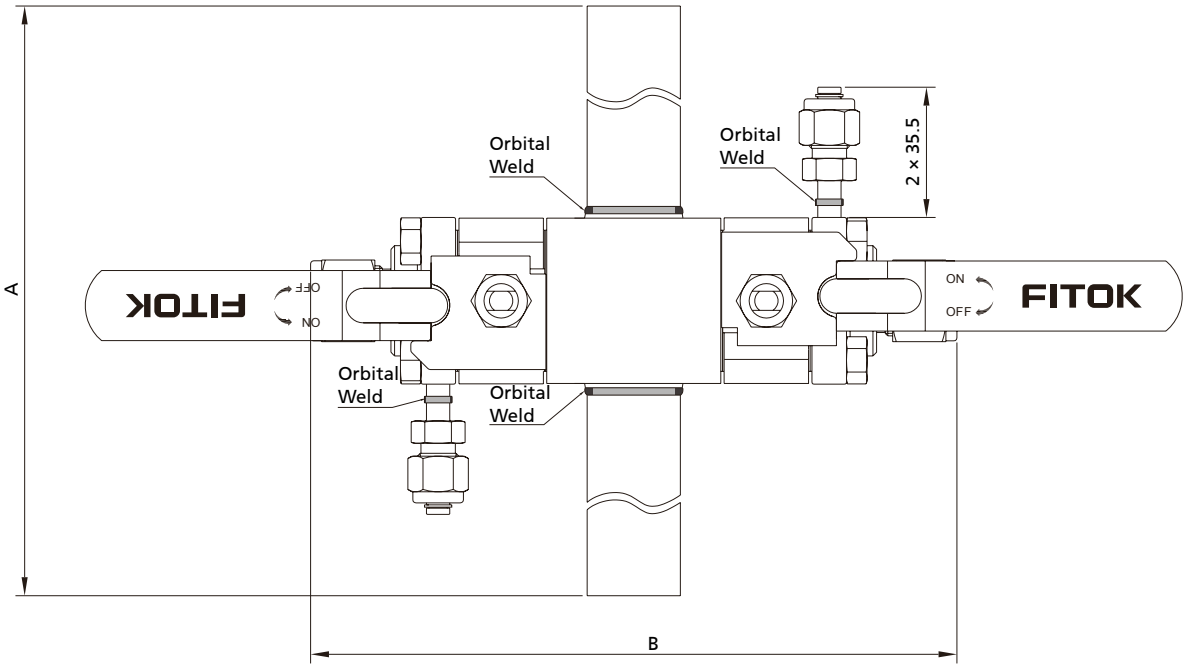

Ordering information	Main line tube size in.	Branch line tube end size in.	Orifice in. (mm)	Dimensions, in. (mm)	
				A	B
BDP□□-DHC-TB8-FL4-05-D1	1/2 × 0.049	1/4	0.187 (4.8)	7.00 (178)	5.19 (132)
BDP□□-DHC-TB8-FL6-07-D1		3/8	0.281 (7.1)		
BDP□□-DHC-TB12-FL4-05-D1	3/4 × 0.065	1/4	0.187 (4.8)	9.00 (229)	5.19 (132)
BDP□□-DHC-TB12-FL6-07-D1		3/8	0.281 (7.1)		
BDP□□-DHC-TB16-FL6-07-D1	1 × 0.065	3/8	0.281 (7.1)	13.0 (330)	6.69 (170)
BDP□□-DHC-TB16-FL8-10-D1		1/2	0.411 (10.4)		6.88 (175)
BDP□□-DHC-TB16-FL12-13-D1		3/4	0.516 (13.1)		
BDP□□-DHC-TB24-FL6-07-D1	1 1/2 × 0.065	3/8	0.281 (7.1)	13.0 (330)	6.94 (176)
BDP□□-DHC-TB24-FL8-10-D1		1/2	0.411 (10.4)		7.13 (181)
BDP□□-DHC-TB24-FL12-13-D1		3/4	0.516 (13.1)		
BDP□□-DHC-TB32-FL8-10-D1	2 × 0.065	1/2	0.411 (10.4)	13.0 (330)	8.19 (208)
BDP□□-DHC-TB32-FL12-13-D1		3/4	0.516 (13.1)		
BDP□□-DHC-TB64-FL24-32-D1	4 × 0.083	1 1/2	1.250 (31.8)	23.0 (584)	14.4 (365)
BDP□□-DHC-TB64-FL32-38-D1		2	1.500 (38.1)		17.2 (437)

Double Horizontal Cross

(Branch ball valves are BGP series)

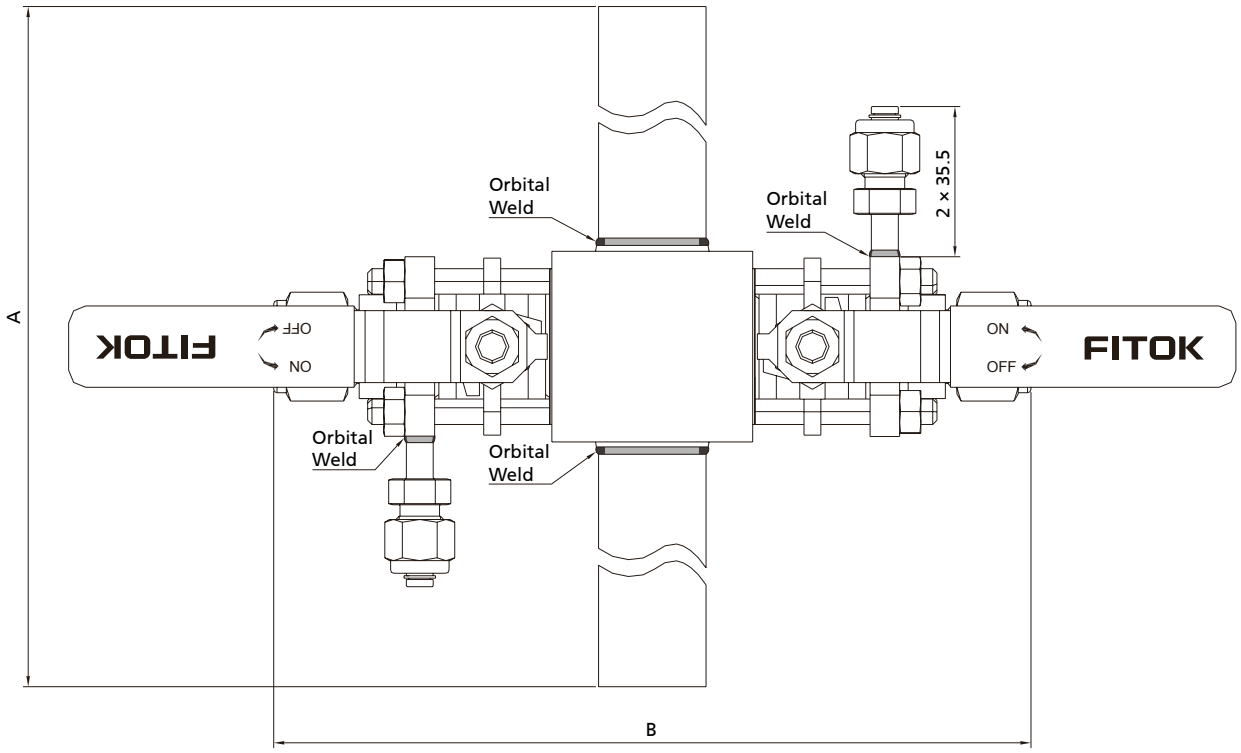

Ordering information	Main line tube size in.	Branch line tube end size in.	Orifice in. (mm)	Dimensions, in. (mm)	
				A	B
BDP□□-DHC-TB8-BGP-FL4-05-D1	1/2 × 0.049	1/4	0.19 (4.8)	7.00 (178)	4.65 (118)
BDP□□-DHC-TB8-BGP-FL6-07-D1		3/8	0.28 (7.1)		
BDP□□-DHC-TB12-BGP-FL4-05-D1	3/4 × 0.065	1/4	0.19 (4.8)	9.00 (229)	4.65 (118)
BDP□□-DHC-TB12-BGP-FL6-07-D1		3/8	0.28 (7.1)		
BDP□□-DHC-TB16-BGP-FL6-07-D1	1 × 0.065	3/8	0.28 (7.1)	13.0 (330)	6.14 (156)
BDP□□-DHC-TB16-BGP-FL8-11-D1		1/2	0.42 (10.6)		6.34(161)
BDP□□-DHC-TB16-BGP-FL12-15-D1		3/4	0.55 (14.0)		
BDP□□-DHC-TB24-BGP-FL6-07-D1	1 1/2 × 0.065	3/8	0.28 (7.1)	13.0 (330)	6.38 (162)
BDP□□-DHC-TB24-BGP-FL8-11-D1		1/2	0.42 (10.6)		6.57 (167)
BDP□□-DHC-TB24-BGP-FL12-15-D1		3/4	0.55 (14.0)		

FITOK

Ordering Number Description

BDPSS - SHC - TB24 - BGP - FL8 - 13 - I - D1 - AR2F3

Series
BDP

Body Material	
SS	CF8M
6L	CF3M

Structure Type	
SHC	Single Horizontal Cross
DHC	Double Horizontal Cross

Main Tube Connection Type	
TB	Fractional Extended Tube Plain Butt Weld

BHP Main Tube Connection Size	
8	1/2"× 0.049"
12	3/4"× 0.065"
16	1"× 0.065"
24	1 1/2"× 0.065"
32	2"× 0.065"
64	4"× 0.083"

BGP Main Tube Connection Size	
8	1/2"× 0.049"
12	3/4"× 0.065"
16	1"× 0.065"
24	1 1/2"× 0.065"

Branch Tube Ball Valve Series	
	BHP Series
BGP	BGP Series

Branch Tube Ball Valve Connection Type	
FL	Fractional Tube Fittings

BHP Branch Tube Ball Valve Connection Size	
4	1/4"
6	3/8"
8	1/2"
12	3/4"
16	1"
24	1 1/2"
32	2"

BGP Branch Tube Ball Valve Connection Size	
4	1/4"
6	3/8"
8	1/2"
12	3/4"

BHP Branch Tube Ball Valve Orifice Size	
05	Maximum 0.19" (4.8 mm)
07	0.28" (7.1 mm)
10	0.41" (10.4 mm)
13	0.52" (13.1 mm)
22	0.88" (22.2 mm)
32	1.25" (31.8 mm)
38	1.5" (38.1 mm)

BGP Branch Tube Ball Valve Orifice Size	
05	Maximum 0.19" (4.8 mm)
07	0.28" (7.1 mm)
11	0.42" (10.6 mm)
13	0.50" (12.7 mm)
15	0.55" (14 mm)
20	0.79" (20 mm)
25	0.98" (25 mm)

Handle	
	Yellow Handle Cover
I	Red Handle Cover
F	Green Handle Cover
J	Blue Handle Cover

Branch Tube Ball Valve Purge	
	None
D1	1/4" Tube Fitting with Plug

Supplementary Testing	
	None
AR2	Helium Leak Testing

Process Specification	
	FC-02
F3	FC-03 (For CF3M only)

Note: "Ordering Number Description" is a reference to understand the combination rules of FITOK product part number.
Not all combinations are available. Should you have any questions, please contact FITOK Group or our authorized distributors.

Hex Bar Stock High Purity Ball Valves
BRP Series



Introduction

BRP series hex bar high purity ball valves are designed to meet the requirements of degreasing, low working pressureand bi-directional flow for the clean dry air (CDA) and bulk gas distribution line, which are widely used in specialty gas, semiconductor and chemical industries.

Features

- Working pressure up to: 2000 psig (138 bar)
- Working temperature: -65 °F to 400 °F (-54 °C to 204 °C)
- Orifice sizes: 0.19" (4.8 mm) to 0.63" (16 mm)
- Factory tested for leaks with nitrogen or compressed air at rated working pressure, with optional helium leak testing to helium leak rate ≤ 1×10^{-8} std·cm^3/s

Pressure vs. Temperature

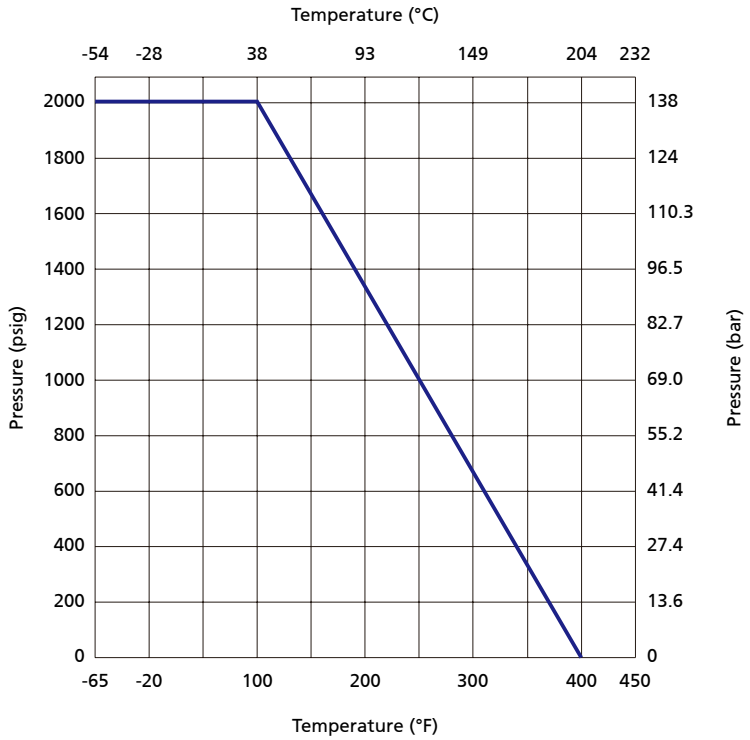

Note: The temperature and pressure rating is based on valves of standard materials.

FITOK

Process Specification

Process Specification / Item	Special Cleaning and Packaging Process (FC-02)	Ultra High Purity Process (FC-03)
Material	316 SS, 316L SS	316L SS
Flow Path Surface Roughness	Ra 25 µin. (0.6 µm)	Ra 10 µin. (0.25 µm)
Process	Machined	Electropolished
Lubrication	Components in contact with the medium are treated with special lubricants that are oxygen- compatible	

Major Materials of Construction

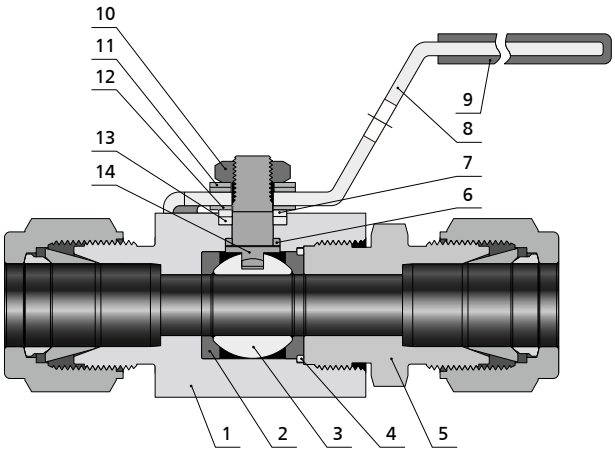

Handle Options

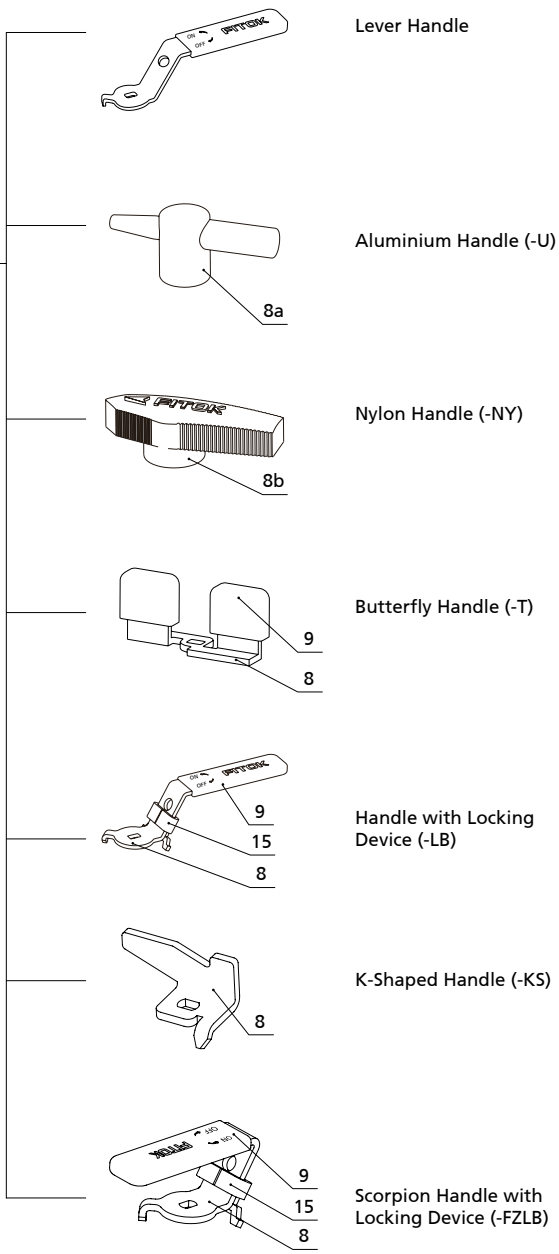

Item	Component	Material/Specification	
		316 SS	316L SS
1	*Body*	*316 SS/A479*	*316L SS/A479*
2	*Seat*	*PFA/D3307*	
3	*Ball*	*316 SS/A479*	*316L SS/A479*
4	*Gasket*	*316L SS/A269*	
5	*End Connection*	*316 SS/A479*	*316 SS/A479*
6	*Lower Packing*	*Modified PTFE*	
7	Washer	316 SS/A479	
8	Handle	304 SS/A240	
8a		Aluminium	
8b		Nylon with 304 SS insert	
9	Sleeve	Vinyl Ester	
10	Stem Nut	Stainless Steel	
11	Gasket	Stainless Steel	
12	Coned-Disc Spring	S17700/A693	
13	*Upper Packing*	*Modified PTFE*	
14	*Stem*	*316 SS /A479*	*316L SS /A479*
15	Lock Block	304 SS/A240	

Note: Components in contact with the media are listed in italics.

Dimensions and Ordering Information

Dimensions, in inches (millimeters), are for reference only.

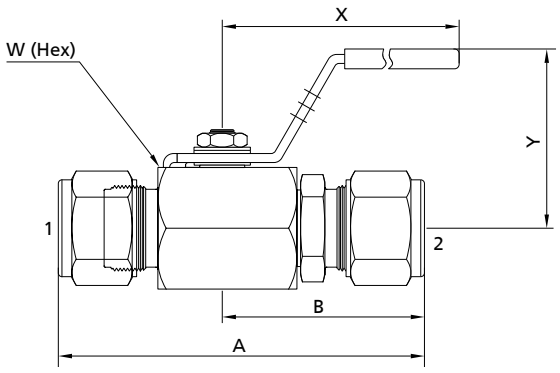

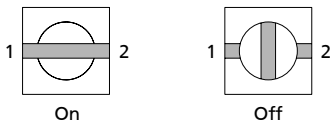

FITOK

Basic Ordering Number	Connection Type and Size		Orifice in. (mm)	Cv	Dimensions，in. (mm)				
	Connection 1	Connection 2			A	B	W	X	Y
BRP□□-ML6-05	6 mm FITOK		0.19 (4.8)	1.25	2.57 (65.2)	1.50 (38.1)	3/4 (19.05)	2.36 (60.0)	1.18 (30)
BRP□□-ML8-05	8 mm FITOK				2.63 (66.8)	1.53 (38.8)			
BRP□□-FL4-05	1/4" FITOK				2.57 (65.2)	1.50 (38.1)			
BRP□□-FL5-05	5/16" FITOK				2.63 (66.8)	1.53 (38.8)			
BRP□□-ML10-07	10 mm FITOK		0.28 (7.1)	2.50	2.87 (72.9)	1.68 (42.7)	7/8 (22.23)		1.26 (32)
BRP□□-FL6-07	3/8" FITOK								
BRP□□-ML12-10	12 mm FITOK		0.35 (8.9)	5.30	3.15 (80.0)	1.83 (46.5)	1 1/16 (27.0)	3.15 (80)	1.54 (39)
BRP□□-ML14-10	14 mm FITOK				3.24 (82.2)	1.87 (47.5)			
BRP□□-FL8-10	1/2" FITOK				3.15 (80.0)	1.83 (46.5)			
BRP□□-FL10-10	5/8" FITOK				3.24 (82.2)	1.87 (47.5)			
BRP□□-ML16-13	16 mm FITOK		0.47 (12.0)	8.60	3.50 (88.9)	2.00 (50.8)	1 1/4 (31.75)	3.94 (100)	2.03 (51.7)
BRP□□-FL12-13	18 mm FITOK								
BRP□□-ML18-13	3/4" FITOK								
BRP□□-FL16-16	22 mm FITOK		0.63 (16.0)	17.35	3.96 (100.6)	2.24 (56.8)	1 1/2 (38.1)		2.15 (54.8)
BRP□□-ML22-16	25 mm FITOK				4.31 (109.5)	2.42 (61.5)			
BRP□□-ML25-16	1" FITOK								

1. FITOK means FITOK double ferrule tube fittings.
2. Sizes and types listed are standard. Other sizes and types are available upon request, please contact FITOK Group or our authorized distributors.
3. Dimensions are shown with FITOK tube fitting nuts finger-tightened. All dimensions are for reference only and are subject to change. For dimensions not shown above, please contact FITOK Group or our authorized distributors.

O-Ring Stem Packing Ball Valves

◎ Suitable for applications where adjusting the packing during valve operation is inconvenient.
◎ Standard factory testing includes a sealing test using nitrogen or compressed air at rated working pressure. Optional helium leak testing is available, with a helium leakage rate ≤1×10^{-8} std·cm^3/s

Materials of Construction

Item	Component	Material/Specification
1	*O-ring*	*FKM, EPDM, Buna N, FFKM*
2	*Lower Packing*	*PEEK*
3	Seal	PTFE

Note: Wetted components are listed in italics. Other components are consistent with standard materials of construction.

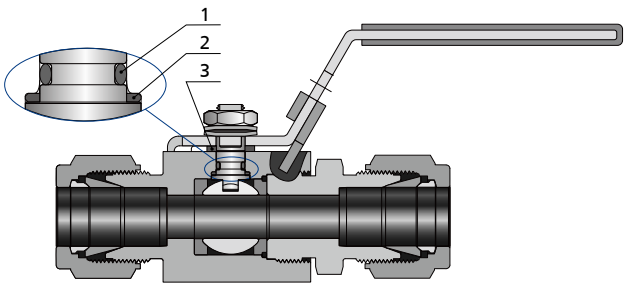

Temperature Range

Stem Packing Material	Designator	Temperature Range °F (°C)
FKM	VI	5 ~ 400 (-15 ~ 204)
EPDM	E	-40 ~ 250 (-40 ~ 121)
Buna N	B	0 ~ 250 (-17 ~ 121)
FFKM	Z	14 ~ 400 (-10 ~ 204)

Ordering Information

◎ To order an O-ring stem packing ball valve, add the suffix VI to the standard part number.
Exmaple: BRPSS-ML12-10VI

Locking Device

Locking Device (-LB)

Body Material	Orifice	Locking Hole Diameter in. (mm)	Example
A variety of optional materials (bar stock)	05	0.19 (4.8)	BRPSS-ML12-10-LB BRPSS-ML12-10-FZLB
	07		
	10	0.24 (6.2)	
	13		
	16		

Note: The locking device is only applicable to lever and scorpion handles. For other handle types requiring a locking device, please contact FITOK Group or our authorized distributors.

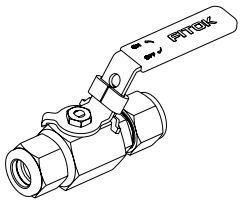

BRPSS-ML12-10-LB

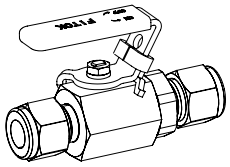

BRPSS-ML12-10-FZLB

Ordering Number Description

BRPSS - ML8 - FL4 - 05B - JLB - AR2F3

Series	
BRP	

Body Material	
SS	316 SS
6L	316L SS

Connection 1 Type	
FL	Fractional Tube Fitting
ML	Metric Tube Fitting
FR	Integral Male FR Fitting
FO	FO Series O-Ring Face Seal Fitting

Connection 1 Size	
4	1/4"
5	5/16"
6	3/8" or 6 mm
8	1/2" or 8 mm
10	5/8" or 10 mm
12	3/4" or 12 mm
14	14 mm
16	1" or 16 mm
18	18 mm
22	22 mm
25	25 mm

Connection 2 Type	Connection 2 Size
Same as Connection1	
Specified in the same way as Connection 1	

Orifice	
05	0.19" (4.8 mm)
07	0.28" (7.1 mm)
10	0.35" (8.9 mm)
13	0.47" (12.0 mm)
16	0.63" (16.0 mm)

Seal Material	
	Modified PTFE
VI	FKM
B	Buna N
E	EPDM
Z	FFKM

Handle	
	Lever Handle with Yellow Handle Sleeve
I	Lever Handle with Red Handle Sleeve
J	Lever Handle with Blue Handle Sleeve
U	Black Aluminium Handle
NY	Black Nylon Handle
T	Butterfly Handle with Yellow Handle Sleeve
TI	Butterfly Handle with Red Handle Sleeve
TJ	Butterfly Handle with Blue Handle Sleeve
FZ	Scorpion Handle with Yellow Handle Sleeve
FZI	Scorpion Handle with Red Handle Sleeve
FZJ	Scorpion Handle with Blue Handle Sleeve
KS	K-Shaped Handle

Locking Device	
	None
LB	Locking Device
Note: Locking Device only applies to lever and scorpion handles	

Supplementary Testing	
	None
AR2	Helium Leak Testing

Process Specification	
	FC-02
F3	FC-03 (For CF3M only)

Note: "Ordering Number Description" is a reference to understand the combination rules of FITOK product part number. Not all combinations are available. Should you have any questions, please contact FITOK Group or our authorized distributors.

FITOK